UNIVERSITY OF CAMBRIDGE INTERNATIONAL EXAMINATIONS
General Certificate of Education Advanced Level

CANDIDATE NAME

CENTRE NUMBER

CANDIDATE NUMBER

0938524315

PHYSICS **9702/41**

Paper 4 A2 Structured Questions **October/November 2009**

1 hour 45 minutes

Candidates answer on the Question Paper.

No Additional Materials are required.

READ THESE INSTRUCTIONS FIRST

Write your Centre number, candidate number and name on all the work you hand in.
Write in dark blue or black pen.
You may use a soft pencil for any diagrams, graphs or rough working.
Do not use staples, paper clips, highlighters, glue or correction fluid.
DO **NOT** WRITE IN ANY BARCODES.

Answer **all** questions.
You may lose marks if you do not show your working or if you do not use appropriate units.

At the end of the examination, fasten all your work securely together.
The number of marks is given in brackets [ ] at the end of each question or part question.

For Examiner's Use	
1	
2	
3	
4	
5	
6	
7	
8	
9	
10	
11	
12	
Total	

This document consists of **21** printed pages and **3** blank pages.

© UCLES 2009

Data

speed of light in free space,	$c = 3.00 \times 10^{8}\ \text{m s}^{-1}$
permeability of free space,	$\mu_0 = 4\pi \times 10^{-7}\ \text{H m}^{-1}$
permittivity of free space,	$\varepsilon_0 = 8.85 \times 10^{-12}\ \text{F m}^{-1}$
elementary charge,	$e = 1.60 \times 10^{-19}\ \text{C}$
the Planck constant,	$h = 6.63 \times 10^{-34}\ \text{J s}$
unified atomic mass constant,	$u = 1.66 \times 10^{-27}\ \text{kg}$
rest mass of electron,	$m_e = 9.11 \times 10^{-31}\ \text{kg}$
rest mass of proton,	$m_p = 1.67 \times 10^{-27}\ \text{kg}$
molar gas constant,	$R = 8.31\ \text{J K}^{-1}\ \text{mol}^{-1}$
the Avogadro constant,	$N_A = 6.02 \times 10^{23}\ \text{mol}^{-1}$
the Boltzmann constant,	$k = 1.38 \times 10^{-23}\ \text{J K}^{-1}$
gravitational constant,	$G = 6.67 \times 10^{-11}\ \text{N m}^2\ \text{kg}^{-2}$
acceleration of free fall,	$g = 9.81\ \text{m s}^{-2}$

© UCLES 2009

Formulae

uniformly accelerated motion, $s = ut + \frac{1}{2}at^2$
$v^2 = u^2 + 2as$

work done on/by a gas, $W = p\Delta V$

gravitational potential, $\phi = -\frac{Gm}{r}$

hydrostatic pressure, $p = \rho gh$

pressure of an ideal gas, $p = \frac{1}{3}\frac{Nm}{V}\langle c^2 \rangle$

simple harmonic motion, $a = -\omega^2 x$

velocity of particle in s.h.m., $v = v_0 \cos \omega t$
$v = \pm \omega \sqrt{(x_0^2 - x^2)}$

electric potential, $V = \frac{Q}{4\pi\varepsilon_0 r}$

capacitors in series, $1/C = 1/C_1 + 1/C_2 + \ldots$

capacitors in parallel, $C = C_1 + C_2 + \ldots$

energy of charged capacitor, $W = \frac{1}{2}QV$

resistors in series, $R = R_1 + R_2 + \ldots$

resistors in parallel, $1/R = 1/R_1 + 1/R_2 + \ldots$

alternating current/voltage, $x = x_0 \sin \omega t$

radioactive decay, $x = x_0 \exp(-\lambda t)$

decay constant, $\lambda = \frac{0.693}{t_{\frac{1}{2}}}$

© UCLES 2009

[Turn over

Section A

Answer **all** the questions in the spaces provided.

1 **(a)** State Newton's law of gravitation.

.....

.....

..... [2]

(b) The Earth may be considered to be a uniform sphere of radius R equal to 6.4×10^6 m.

A satellite is in a geostationary orbit.

(i) Describe what is meant by a *geostationary orbit*.

.....

.....

.....

..... [3]

(ii) Show that the radius x of the geostationary orbit is given by the expression

$$gR^2 = x^3\omega^2$$

where g is the acceleration of free fall at the Earth's surface and ω is the angular speed of the satellite about the centre of the Earth.

[3]

(iii) Determine the radius x of the geostationary orbit.

radius = ... m [3]

© UCLES 2009

2 An ideal gas occupies a container of volume $4.5 \times 10^3\,cm^3$ at a pressure of $2.5 \times 10^5\,Pa$ and a temperature of 290 K.

(a) Show that the number of atoms of gas in the container is 2.8×10^{23}.

[2]

(b) Atoms of a real gas each have a diameter of $1.2 \times 10^{-10}\,m$.

(i) Estimate the volume occupied by 2.8×10^{23} atoms of this gas.

volume = ... m^3 [2]

(ii) By reference to your answer in **(i)**, suggest whether the real gas does approximate to an ideal gas.

.....

.....

..... [2]

© UCLES 2009

3 **(a)** A student states, quite wrongly, that temperature measures the amount of thermal energy (heat) in a body.

State and explain two observations that show why this statement is incorrect.

1. .....

.....

.....

2. .....

.....

.....

[4]

(b) A thermometer and an electrical heater are inserted into holes in an aluminium block of mass 960 g, as shown in Fig. 3.1.

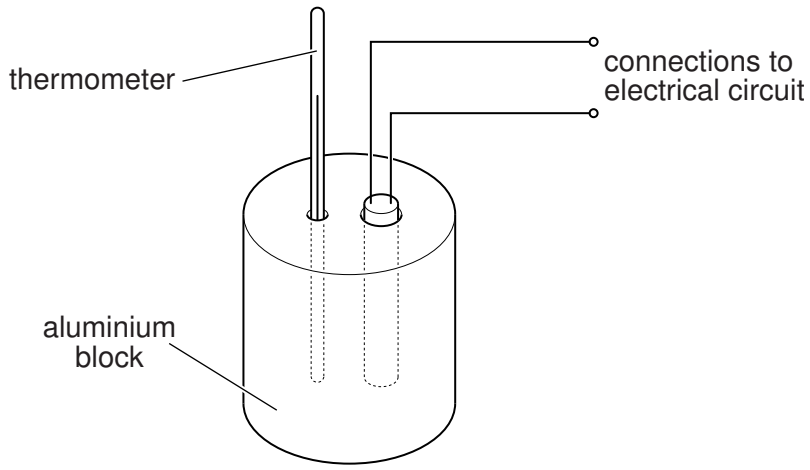

Fig. 3.1

The power rating of the heater is 54 W.

The heater is switched on and readings of the temperature of the block are taken at regular time intervals. When the block reaches a constant temperature, the heater is switched off and then further temperature readings are taken. The variation with time t of the temperature θ of the block is shown in Fig. 3.2.

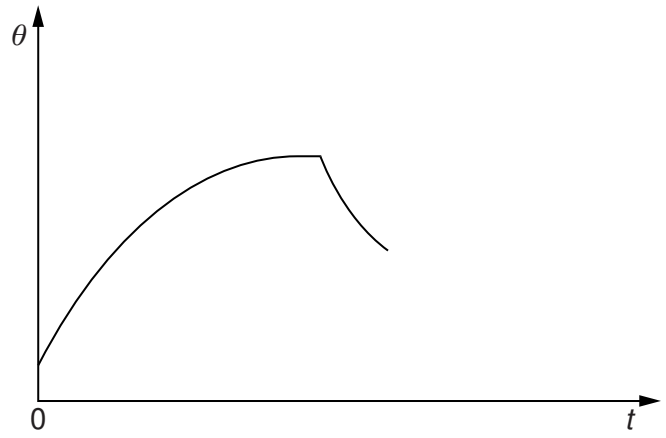

Fig. 3.2

(i) Suggest why the rate of rise of temperature of the block decreases to zero.

.....

.....

..... [2]

(ii) After the heater has been switched off, the maximum rate of fall of temperature is 3.7 K per minute.

Estimate the specific heat capacity of aluminium.

specific heat capacity = ... J $kg^{-1} K^{-1}$ [3]

© UCLES 2009

4 The variation with time t of the displacement x of the cone of a loudspeaker is shown in Fig. 4.1.

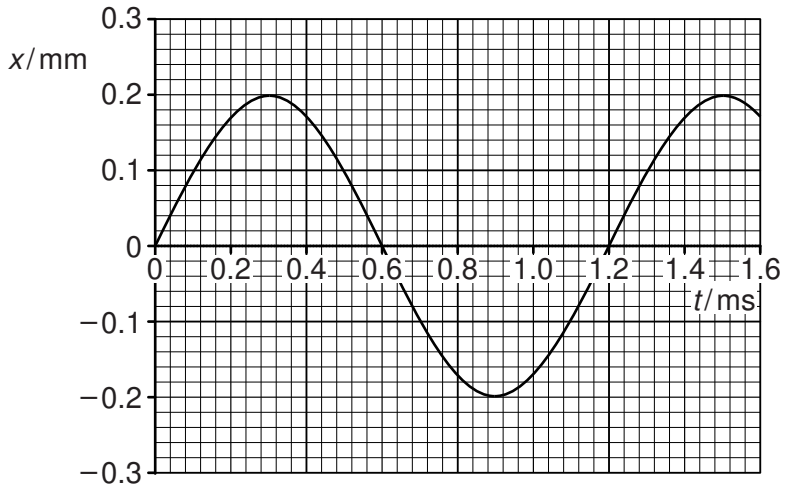

Fig. 4.1

(a) Use Fig. 4.1 to determine, for these oscillations,

(i) the amplitude,

amplitude = ... mm [1]

(ii) the frequency.

frequency = ... Hz [2]

(b) State two times at which

(i) the speed of the cone is maximum,

time ..... ms and time ..... ms [1]

(ii) the acceleration of the cone is maximum.

time ..... ms and time ..... ms [1]

© UCLES 2009

(c) The effective mass of the cone is 2.5 g.

Use your answers in **(a)** to determine the maximum kinetic energy of the cone.

kinetic energy = ... J [3]

(d) The loudspeaker must be designed so that resonance of the cone is avoided.

(i) State what is meant by *resonance*.

.....

.....

..... [2]

(ii) State and briefly explain one other situation in which resonance should be avoided.

.....

.....

.....

..... [2]

5 **(a)** Define *electric potential* at a point.

.....

.....

..... [2]

(b) An α-particle is emitted from a radioactive source with kinetic energy of 4.8 MeV.

The α-particle travels in a vacuum directly towards a gold ($^{197}_{79}$Au) nucleus, as illustrated in Fig. 5.1.

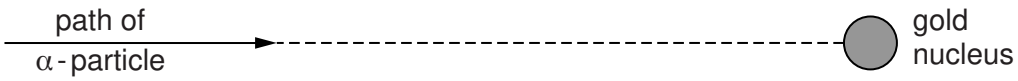

Fig. 5.1

The α-particle and the gold nucleus may be considered to be point charges in an isolated system.

(i) Explain why, as the α-particle approaches the gold nucleus, it comes to rest.

.....

.....

..... [2]

(ii) For the closest approach of the α-particle to the gold nucleus determine

1. their separation,

separation = ... m [3]

2. the magnitude of the force on the α-particle.

force = ... N [2]

6 The current in a long, straight vertical wire is in the direction XY, as shown in Fig. 6.1.

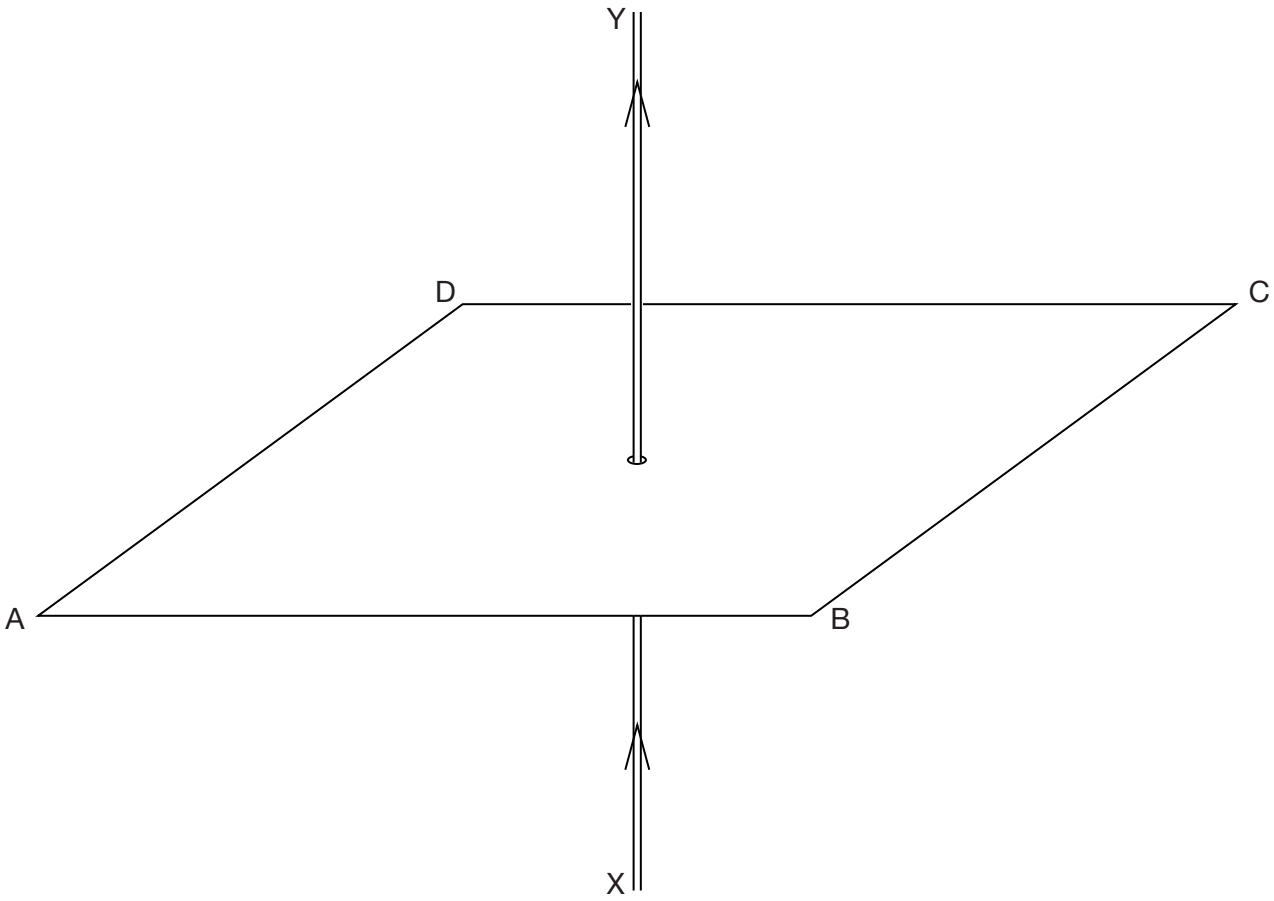

Fig. 6.1

(a) On Fig. 6.1, sketch the pattern of the magnetic flux in the horizontal plane ABCD due to the current-carrying wire. Draw at least four flux lines. [3]

(b) The current-carrying wire is within the Earth's magnetic field. As a result, the pattern drawn in Fig. 6.1 is superposed with the horizontal component of the Earth's magnetic field.

Fig. 6.2 shows a plan view of the plane ABCD with the current in the wire coming out of the plane.

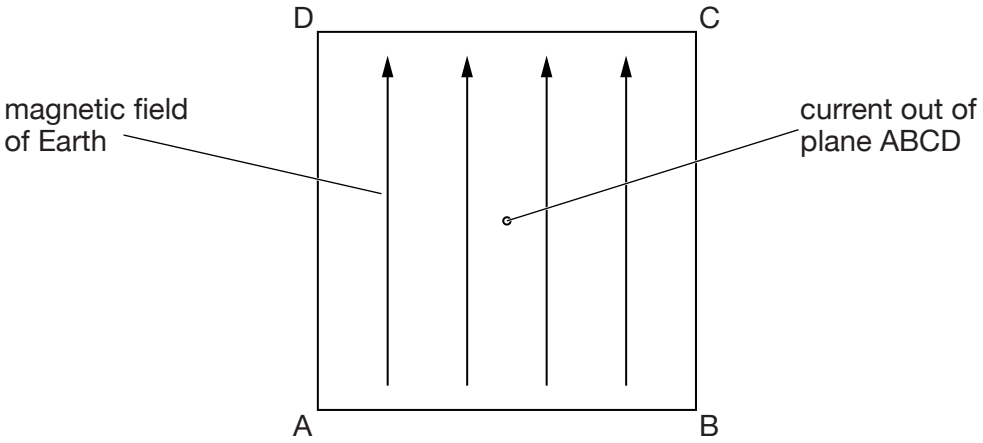

Fig. 6.2

The horizontal component of the Earth's magnetic field is also shown.

(i) On Fig. 6.2, mark with the letter P a point where the magnetic field due to the current-carrying wire could be equal and opposite to that of the Earth. [1]

(ii) For a long, straight wire carrying current I, the magnetic flux density B at distance r from the centre of the wire is given by the expression

$$B = \mu_0 \frac{I}{2\pi r}$$

where μ_0 is the permeability of free space.

The point P in **(i)** is found to be 1.9 cm from the centre of the wire for a current of 1.7 A.

Calculate a value for the horizontal component of the Earth's magnetic flux density.

flux density = ... T [2]

(c) The current in the wire in **(b)(ii)** is increased. The point P is now found to be 2.8 cm from the wire.

Determine the new current in the wire.

current = ... A [2]

7 A sinusoidal alternating voltage is to be rectified.

(a) Suggest one advantage of full-wave rectification as compared with half-wave rectification.

.....

..... [1]

(b) The rectification is produced using the circuit of Fig. 7.1.

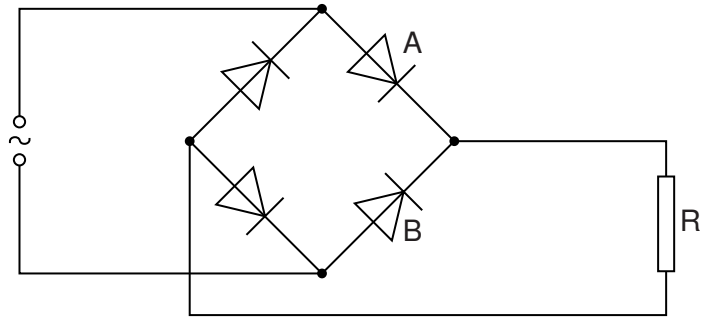

Fig. 7.1

All the diodes may be considered to be ideal.

The variation with time *t* of the alternating voltage applied to the circuit is shown in Fig. 7.2 and in Fig. 7.3.

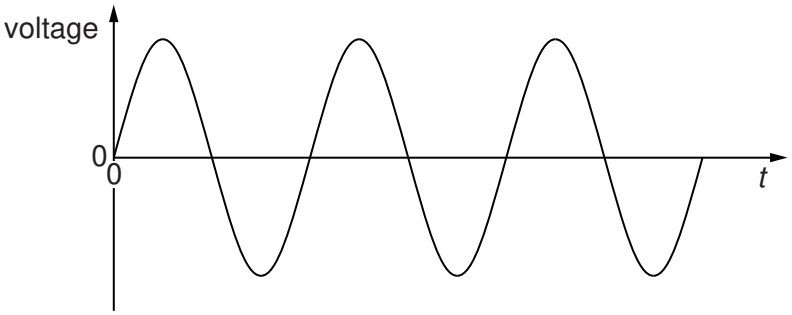

Fig. 7.2

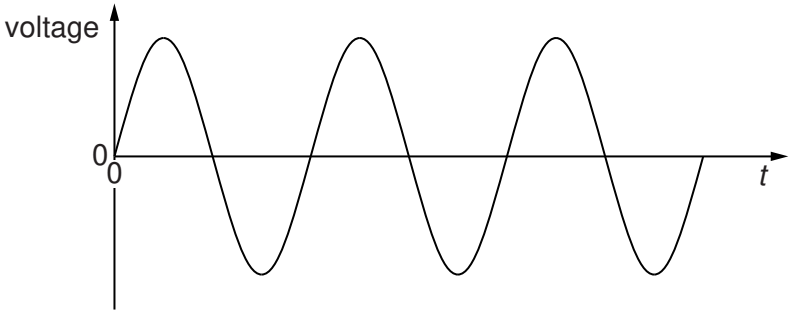

Fig. 7.3

(i) On the axes of Fig. 7.2, draw a graph to show the variation with time *t* of the potential difference across diode A. [1]

(ii) On the axes of Fig. 7.3, draw a graph to show the variation with time *t* of the potential difference across diode B. [1]

(c) (i) On Fig. 7.1, draw the symbol for a capacitor, connected into the circuit so as to provide smoothing. [1]

(ii) Fig. 7.4 shows the variation with time *t* of the smoothed potential difference across the resistor R in Fig. 7.1.

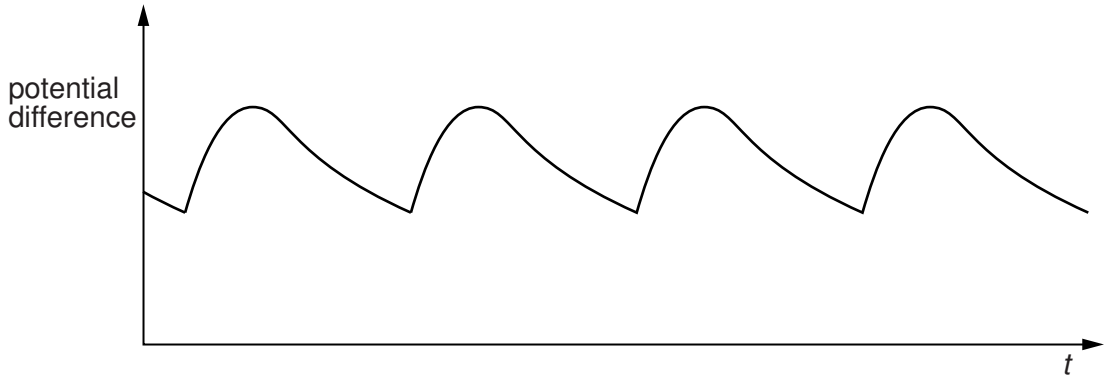

Fig. 7.4

1. State how the amount of smoothing may be increased.

.....

..... [1]

2. On Fig. 7.4, draw the variation with time *t* of the potential difference across resistor R for increased smoothing. [2]

© UCLES 2009

8 The controlled reaction between deuterium ($^{2}_{1}$H) and tritium ($^{3}_{1}$H) has involved ongoing research for many years. The reaction may be summarised as

$$^{2}_{1}\text{H} + {}^{3}_{1}\text{H} \rightarrow {}^{4}_{2}\text{He} + {}^{1}_{0}\text{n} + Q$$

where Q = 17.7 MeV.

Binding energies per nucleon are shown in Fig. 8.1.

	binding energy per nucleon / MeV
$^{2}_{1}$H	1.12
$^{1}_{0}$n	–
$^{4}_{2}$He	7.07

Fig. 8.1

(a) Suggest why binding energy per nucleon for the neutron is not quoted.

.....

..... [1]

(b) Calculate the mass defect, in kg, of a helium $^{4}_{2}$He nucleus.

mass defect = ... kg [3]

(c) (i) State the name of the type of reaction illustrated by this nuclear equation.

..... [1]

(ii) Determine the binding energy per nucleon, in MeV, of tritium ($^{3}_{1}$H).

binding energy per nucleon = ... MeV [3]

© UCLES 2009

Section B

Answer **all** the questions in the spaces provided.

9 A metal wire strain gauge is firmly fixed across a crack in a wall, as shown in Fig. 9.1, so that the growth of the crack may be monitored.

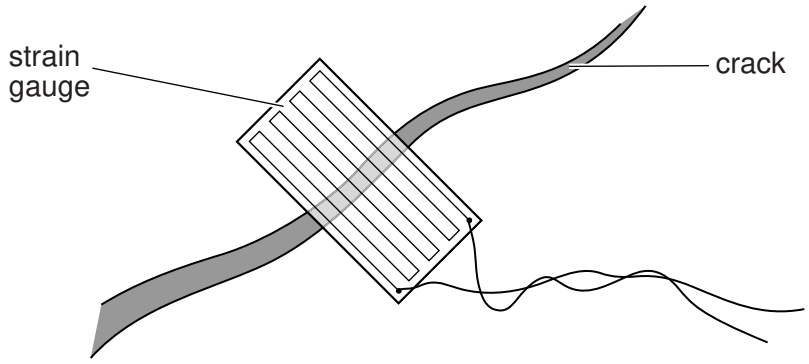

Fig. 9.1

(a) Explain why, as the crack becomes wider, the resistance of the strain gauge increases.

.....

.....

.....

..... [3]

(b) The strain gauge has an initial resistance of 143.0 Ω and, after being fixed in position across the crack for several weeks, the resistance is found to be 146.2 Ω.

The change in the area of cross-section of the strain gauge wire is negligible.

Calculate the percentage increase in the width of the crack. Explain your working.

increase = ... % [3]

10 The circuit of Fig. 10.1 may be used to indicate temperature change.

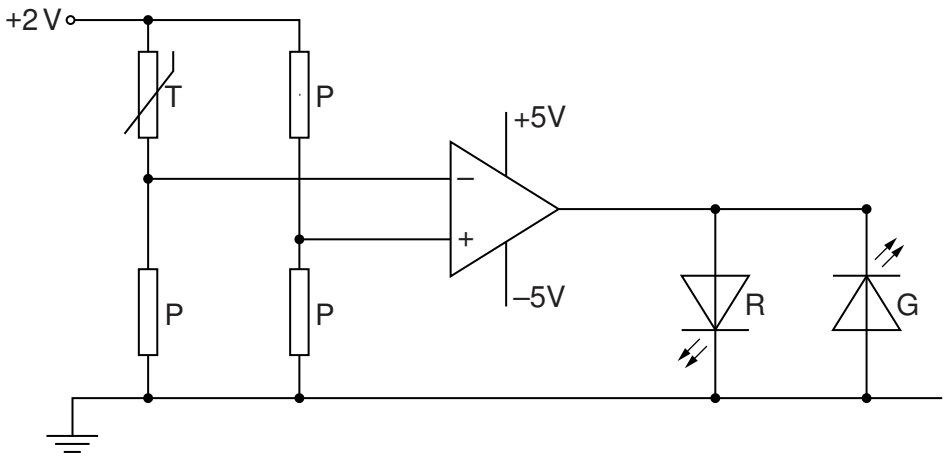

Fig. 10.1

The resistance of the thermistor T at 16 °C is 2100 Ω and at 18 °C, the resistance is 1900 Ω. Each resistor P has a resistance of 2000 Ω.

Determine the change in the states of the light-emitting diodes R and G as the temperature of the thermistor changes from 16 °C to 18 °C.

.....

..... [4]

© UCLES 2009

11 Outline briefly the main principles of the use of magnetic resonance to obtain diagnostic information about internal body structures.

.....

.....

.....

.....

.....

.....

.....

.....

.....

.....

.....

..... [6]

12 **(a)** State and explain two advantages of the transmission of information in digital, rather than analogue, form.

1. .....

.....

.....

2. .....

.....

.....

[4]

(b) Convert

(i) the decimal number 13 to a four-bit digital number,

..... [1]

(ii) the digital number 0101 to a decimal number.

..... [1]

(c) An analogue signal is to be transmitted digitally. A block diagram for part of the transmission system is shown in Fig. 12.1.



Fig. 12.1

(i) Complete Fig. 12.1 by labelling block X and block Y. [2]

(ii) State the purpose of the parallel-to-serial converter.

.....

.....

..... [2]

(d) The original analogue signal is shown in Fig. 12.2. The recovered signal after transmission is shown in Fig. 12.3.

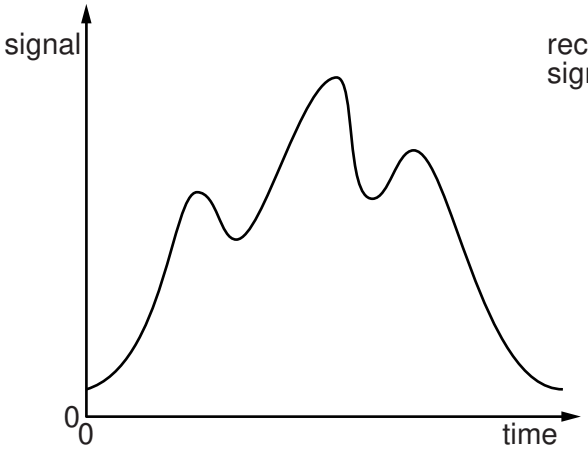

Fig. 12.2

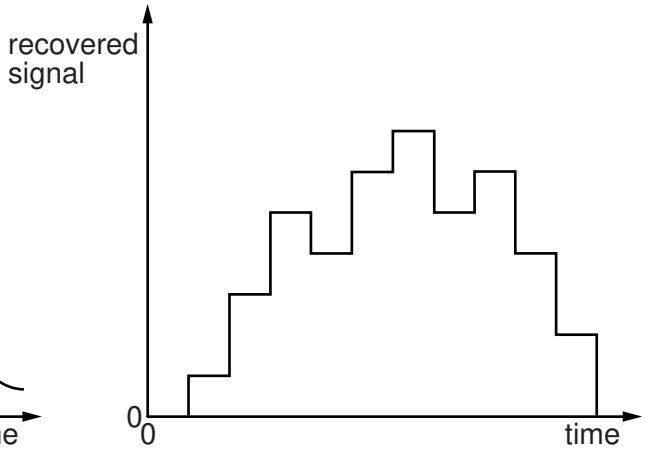

Fig. 12.3

Suggest and explain two ways in which the reproduction of the input signal may be improved.

1. .....

.....

.....

2. .....

.....

.....

[4]

BLANK PAGE

BLANK PAGE

BLANK PAGE

Permission to reproduce items where third-party owned material protected by copyright is included has been sought and cleared where possible. Every reasonable effort has been made by the publisher (UCLES) to trace copyright holders, but if any items requiring clearance have unwittingly been included, the publisher will be pleased to make amends at the earliest possible opportunity.

University of Cambridge International Examinations is part of the Cambridge Assessment Group. Cambridge Assessment is the brand name of University of Cambridge Local Examinations Syndicate (UCLES), which is itself a department of the University of Cambridge.